T2A71A-2 0,37KW 230/400V B14

Three-phase asynchronous motor in aluminum

Motor type	T2A71A-2 0,37KW 230/400V B14
Brand	BUSCK
Item number	83020713

Voltage V	Power kW	Frequency Hz	Current A	Speed rpm
230	0,37	50	1,57	2840
400	0,37	50	0,90	2840
460	0,43	60	0,90	3408

Duty	S1	Efficiency class	IE2
Enclosure	IP55	Efficiency, load 100%	71,5
Insulation class	F	Efficiency, load 75%	70,9
Cooling	IC411 (TEFC)	Efficiency, load 50%	65,8
Max. ambient temp.	45°C	Power fact, load 100%	0,83
Min. ambient temp.	-20°C		
Max. temp. rise	80 K	Painting	Standard
Max altitude, masl	1000	Color	RAL 9005
		Weight kg	4,9
Torque, Nm	1,24	Sound pressure Lp dB(A)	64
Starting torque ratio	2	Bearing DE	6204-2Z/C3
Pull up torque ratio	1,4	Bearing NDE	6204-2Z/C3
Pull out torque ratio	2,2	Balance grade	Normal
Starting current ratio	5,1	Inertia kgm2	0,00035
This motor has DNV type approval		Cable entries	1xM20
Note	IE2		

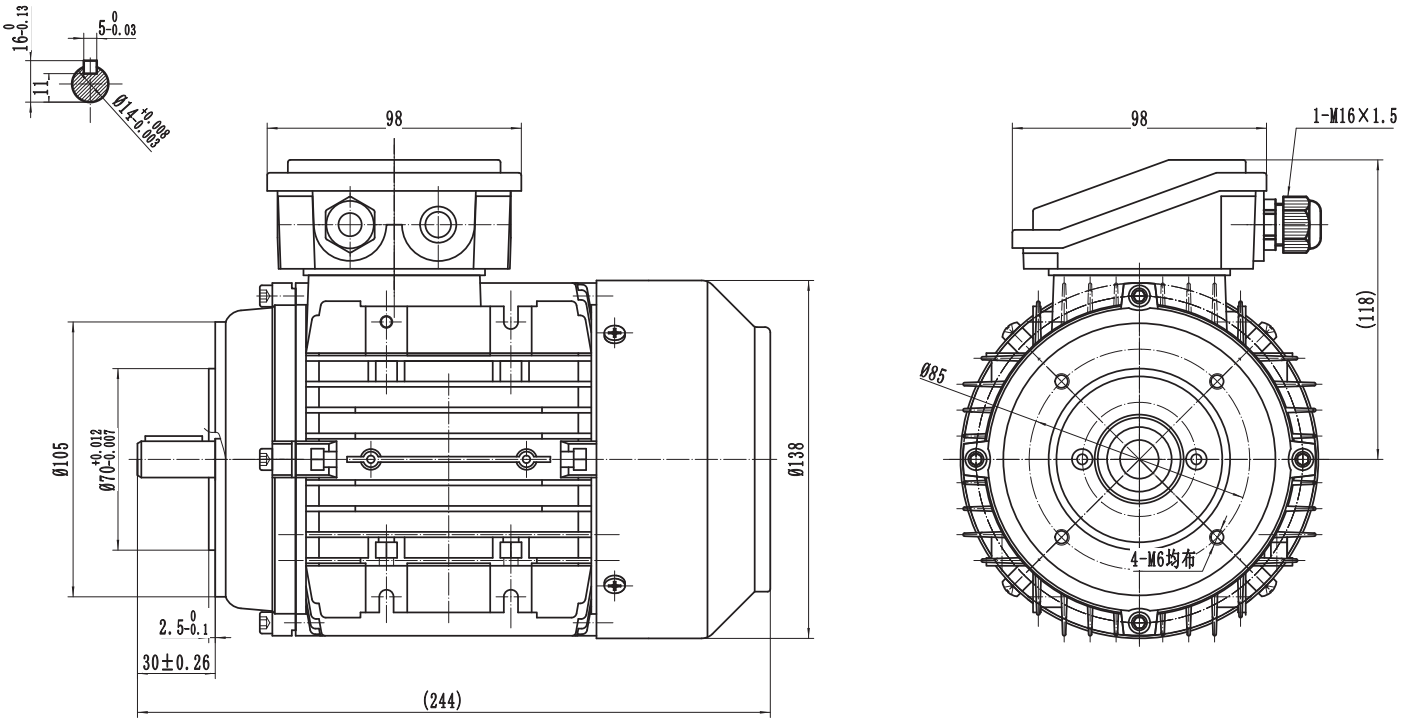

BUSCK
www.busck.eu

Busck & Co AB
Gamla Riksvägen 14
428 32 Göteborg
Sweden
556027-1990
info@busck.se

Busck & Co ApS
Postboks 108
0900 København C
Denmark
info@busck.eu

Busck AS
Skibåsen 35C
4636 Kristiansand
Norway
info@busck.no